QB
QUAD BENCH

QB20

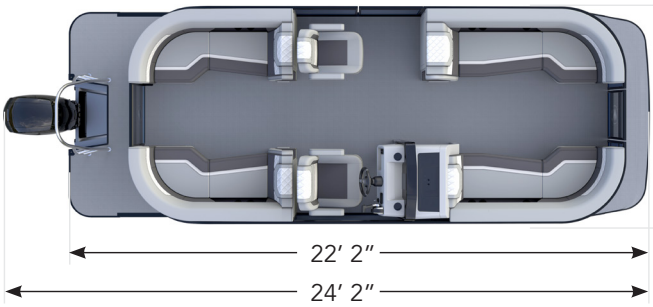

QB22

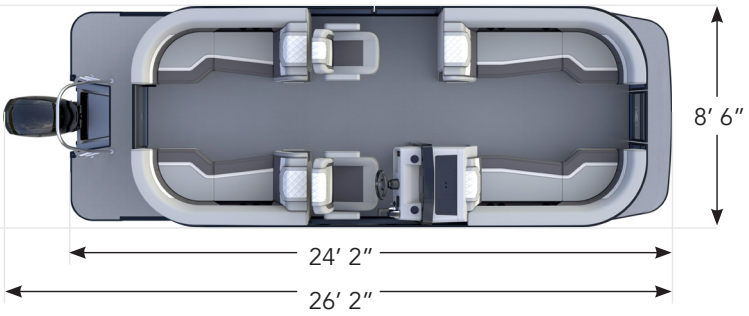

MERCURY


60 HP - 21 MPH


90 HP - 25 MPH


115HP - 30 MPH


150 HP - 35 MPH

*MPH is based on a one-person-on-board test.

Length	20′	22′
Average Storage Length	26′	28′
Average Towing Length	24′ 5″	26′ 5″
Max Person Capacity	10	11
Max Person Weight	TBD	TBD
Dry Weight	TBD	TBD
Fuel Capacity	30 gal.	30 gal.
Pontoon Tube Length	20′ 4″	22′ 4″
25″ Pontoon Tube	X	X
Pontoon Tube Material	0.080 THK	0.080 THK
Pontoon Nose Cone Material	0.100 THK	0.100 THK
Battery Shutoff Switch	X	X
Extended-Aft Swim Platform	X	X
Drag Reduction System	X	X
Performance Shield	Rear	Rear
Ventilated Pet View Bow and Aft Gate	X	X
LED Docking Lights w/ Navigation Lights	X	X
Black Marine-Grade Powder-Coated Rails	X	X
Hydraulic Steering	150 HP Only	150 HP Only
Trailerable & Poleless Mooring Cover	X	X
Extra-Large Integrated Pet Water Dish	X	X
Extra-Wide 25-Inch Captain's Chair w/ Swivel & Tilt	X	X
Courtesy Lights	X	X
Lifted Furniture	X	X
Ski Tow Bar	X	X
Fiberglass Helm	X	X
7″ Vista Touch Digital Screen	X	X

QB TRI

QUAD BENCH TRIPLETOON

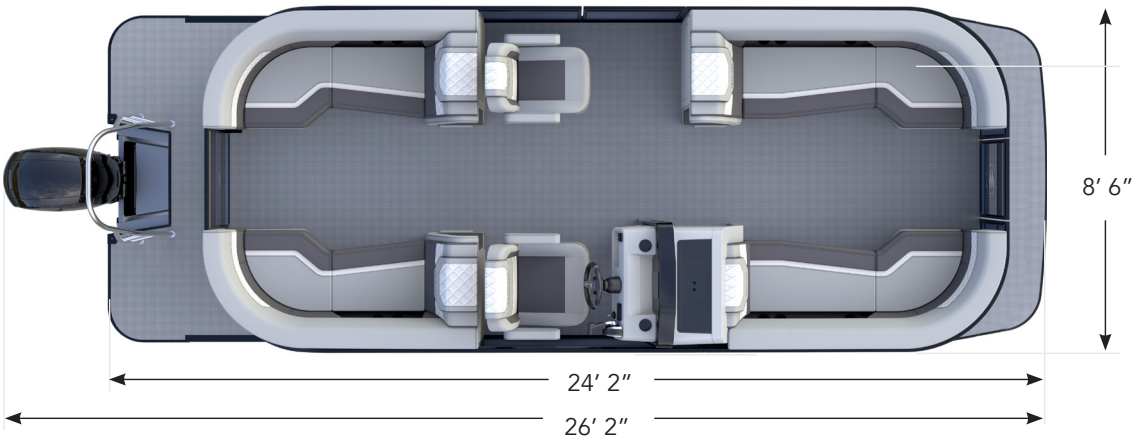

MERCURY



60 HP - 21 MPH



90 HP - 25 MPH



115HP - 30 MPH



150 HP - 35 MPH



200 HP - 44 MPH

*MPH is based on a one-person-on-board test.

Length	22′ Tri
Average Storage Length	28′
Average Towing Length	26′ 5″
Max Person Capacity	13
Max Person Weight	TBD
Dry Weight	TBD
Fuel Capacity	58 gal.
Pontoon Tube Length	22′ 4″
25″ Pontoon Tube	X
Pontoon Tube Material	0.080 THK
Pontoon Nose Cone Material	0.100 THK
Battery Shutoff Switch	X
Extended-Aft Swim Platform	X
Performance Shield	Full Length
Ventilated Pet View Bow and Aft Gate	X
LED Docking Lights w/ Navigation Lights	X
Black Marine-Grade Powder-Coated Rails	X
Hydraulic Steering	150 & 200 HP Only
Trailerable & Poleless Mooring Cover	X
Extra-Large Integrated Pet Water Dish	X
Extra-Wide 25-Inch Captain's Chair w/ Swivel & Tilt	X
Courtesy Lights	X
Lifted Furniture	X
Ski Tow Bar	X
Fiberglass Helm	X
7″ Vista Touch Digital Screen	X